PRODUCT DATASHEETS

EVOLUTION XS READER

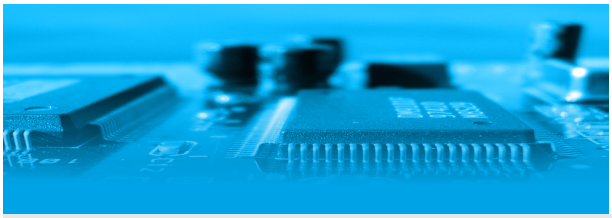

Highlights

MASTERING ENCRYPTION KEYS
Standard readers and master encryption keys can be customized by using programming badges and software. Keys stored in the cards can be diversificated to protect the master key.

VERY SECURE
Connected to specific modules (RS485 with AES128 encryption), the EVOLUTION XS reader can operate in «transparent» mode (encryption keys are not stored in the reader).

ADAPTED TO YOUR CORPORATE IMAGE
The EVOLUTION XS reader has a removable case that can be customized at an extra cost.
Backlighting can also be adjusted according to the environment.

Main features

- Well-known, public algorithms (TDES, AES, RSA, HMAC-SHA-256...) are used for secure data reading
- Output formats : DataClock/Wiegand or RS485 (AES128 encryption)
- Signal & pullout prevention (accelerometer) transmitted via the TIL remote modules
- IK10 polycarbonate case, resistant to water jets and dust (IP65)
- Cases are available in different colors. 360 different colors can also be used for backlighting

Indoor doorjamb reader

EVOLUTION XS is a fully programmable contactless reader supporting multiple protocols.
It is also compatible with the whole Mifare® ID family: Ultralight, Ultralight C, Mifare Classic, Mifare Plus, DESFire and DESFire EV1.

Designed for both indoor and outdoor use, and doorjamb mount. Backlighting ensures good visibility in the dark.

As the whole the EVOLUTION series, several versions of this model are available. It can be programmed to read UID numbers or secure data (files or sectors) stored in protected areas.

The modular nature of the EVOLUTION series offers the required flexibility to extend, to upgrade the security level, or to perform technological migrations across your sites.

READERS IN THE 13,56 MHZ EVOLUTION SERIES				
EVOLUTION IN	EVOLUTION XS	EVOLUTION ST	EVOLUTION KB	EVOLUTION TL

EVOLUTION XS READERS

Dimensions

Front and side views

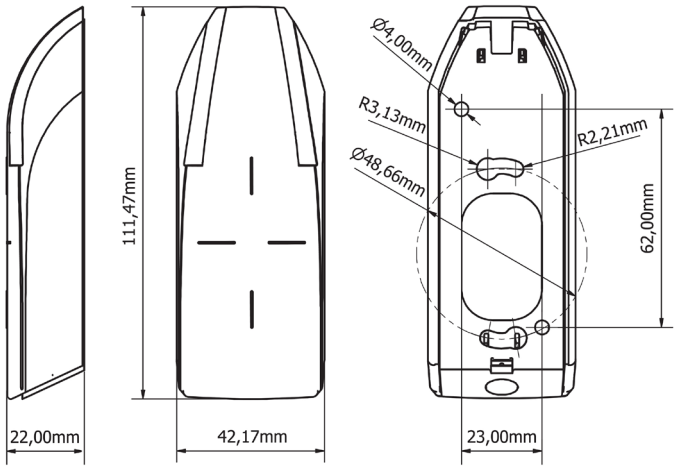

Product references

UID reading MIFARE / MIFARE+ / DESFire EV1

- LEC05XF1000-NL0 : EVOLUTION XS (UID) reader, Wiegand/Dataclock multiple format, cable output, black
- LEC05XF1000-NL5T : EVOLUTION XS (UID) reader, RS485, cable output, black

Secure reader SSCP V1 MIFARE / MIFARE+ / DESFire EV1

- LEC05XF4000-NL5 : EVOLUTION XS secure reader, RS485, cable output, black

Secure reader SSCP V2 MIFARE / MIFARE+ / DESFire EV1, qualified ANSSI

- LEC05XF5000-NL5 : EVOLUTION XS secure reader, RS485, cable output, black

Technical details

- Power supply : 10 to 15 VDC
- Average consumption : 120 mA
- Emission frequency : 13.56 MHz – ISO14443 A & B, ISO18092 (NFC). Chips: MIFARE® Ultralight & Ultralight C, MIFARE Classic, MIFARE Plus, MIFARE DESFire EV1 & EV2, NFC, SMART MX, CPS3, Moneo, iCLASS, PicoPass
- Max. distance between module & reader : 100 m (Wiegand/Dataclock) to 600m (RS485)
- Communication interface : Data/clock ISO2, Wiegand or RS485 with AES128 encryption
- Connection : 3 m. cable
- Protection : Pullout detection (accelerometer) + possibility of removing keys
- Dimensions : 111x42x22 mm
- Mounting : Surface or panel mount (drilling 32 mm x 2)
- Reading distance : Up to 6 cm with Mifare Classic badges, 4 cm with DESFire EV1 badges
  Compatible with any support types, including metallic surfaces (no spacer needed)
- Parameterisable signaling :
  » 2 RGB LEDs - 360 colors available
  » Integrated buzzer (driven by NG / V3 control units only)
- Materials :
  » ABS-PC UL-V0 (black)
  » ASA-PC-UL-V0 UV (white)
- Resistance / sealing : IK10, IP65 (excluding connectors)
- Operating temperature : -20°C to +70°C
- Humidity : 0 to 95%
- Weight : 0.150 kg

Secure reading configuration

- Customers not requiring the management of encryption keys (secure reading) will be provided with ready to use readers -configured by TIL TECHNOLOGIES.
- Customers requiring the management of encryption keys (secure reading), will be provided with a programming kit to encode IDs and configure readers. TIL TECHNOLOGIES will be providing readers requiring configuration.

Sales Contact : sales@til-technologies.com

Non contractual informations
subject to modification without notice.

ISO 9001 BUREAU VERITAS Certification
FRENCH SAVOIR FAIRE